T2A63A-4 0,12KW 230/400V B14

Three-phase asynchronous motor in aluminum

Motor type	T2A63A-4 0,12KW 230/400V B14
Brand	BUSCK
Item number	83040633

Voltage V	Power kW	Frequency Hz	Current A	Speed rpm
230	0,12	50	0,77	1395
400	0,12	50	0,44	1395
460	0,14	60	0,44	1674

Duty	S1	Efficiency class	IE2
Enclosure	IP55	Efficiency, load 100%	60,1
Insulation class	F	Efficiency, load 75%	56,7
Cooling	IC411 (TEFC)	Efficiency, load 50%	48,2
Max. ambient temp.	45°C	Power fact, load 100%	0,65
Min. ambient temp.	-20°C		
Max. temp. rise	80 K	Painting	Standard
Max altitude, masl	1000	Color	RAL 9005
		Weight kg	3,5
Torque, Nm	0,82	Sound pressure Lp dB(A)	52
Starting torque ratio	2,2	Bearing DE	6201 2RZ C3
Pull up torque ratio	1,7	Bearing NDE	6201 2RZ C3
Pull out torque ratio	2,3	Balance grade	Normal
Starting current ratio	3,5	Inertia kgm2	0,00027
This motor has DNV type approval		Cable entries	1xM20
Note	IE2		

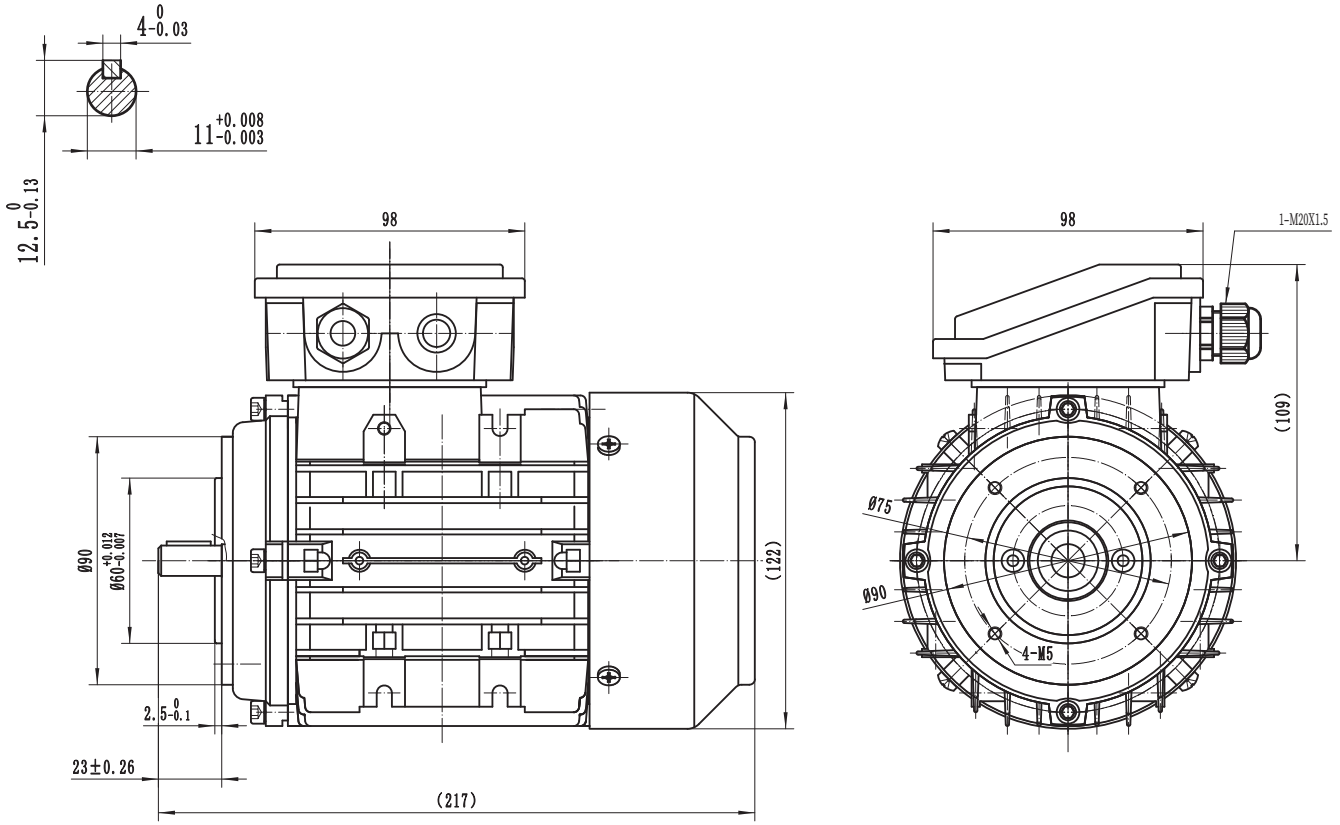

BUSCK
www.busck.eu

Busck & Co AB
Gamla Riksvägen 14
428 32 Göteborg
Sweden
556027-1990
info@busck.se

Busck & Co ApS
Postboks 108
0900 København C
Denmark
info@busck.eu

Busck AS
Skibåsen 35C
4636 Kristiansand
Norway
info@busck.no